PLEASE CHECK WWW.MOLEX.COM FOR LATEST PART INFORMATION

Part Number: 0940904030

Status: Active

Overview: Standard Quick-Disconnect Terminals

Description: Quick Disconnect, 1 Cut, Cover for female terminal, for (0.50-2.50mm²) 14-20 AWG Wire, Accepts 6.35 x 0.81mm Tab

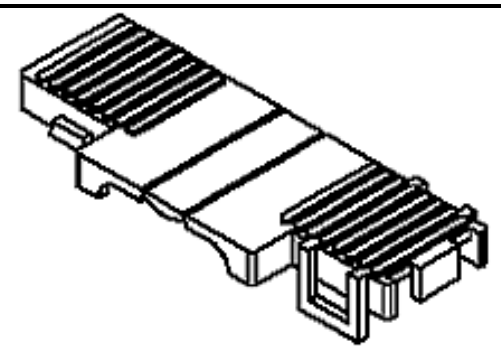

Series image - Reference only

Documents:

Drawing (PDF)
Product Specification PS-94090-001 (PDF)
Application Specification AS-45499-001-001 (PDF)
RoHS Certificate of Compliance (PDF)

General

Product Family	Quick Disconnects
Series	94090
Crimp Quality Equipment	Yes
Insulated	No
Overview	Standard Quick-Disconnect Terminals
Product Name	N/A
Type	Quick Disconnect
UPC	800754327848

Physical

Barrel Type	N/A
Breakaway	No
Circuits (maximum)	1
Color - Resin	Natural
Gender	Female
Glow-Wire Capable	No
Insulation	None
Lock to Mating Part	None
Material - Resin	Nylon
Net Weight	0.480/g
Number of Rows	1
Orientation	Straight
Packaging Type	Bag
Polarized to Mating Part	Yes
Tab Thickness	N/A
Tab Width	N/A
Temperature Range - Operating	-40° to +105°C
Wire Insulation Diameter	2.00-4.30mm
Wire Size AWG	14, 16, 18, 20
Wire Size mm²	0.50-2.50

Electrical

Voltage - Maximum	250V

Solder Process Data

Lead-freeProcess Capability	N/A

Material Info

Reference - Drawing Numbers

Application Specification	AS-45499-001-001
Product Specification	PS-94090-001
Sales Drawing	SD-94090-020

EU ELV
Compliant

EU RoHS
Compliant

China RoHS

REACH SVHC
Not Contained Per - ED/61/2018 (27 June 2018)

Halogen-Free Status
Low-Halogen

Need more information on product environmental compliance?

Email productcompliance@molex.com
Please visit the Contact Us section for any non-product compliance questions.

China ROHS	Green Image
ELV	Compliant
RoHS Phthalates	Not Contained

Search Parts in this Series
94090 Series

Use With
94030-50**

PLEASE CHECK WWW.MOLEX.COM FOR LATEST PART INFORMATION