PART NAME	NEMA 4X DIE-CAST ALUMINUM BOX w/MTG. BRKTS.	PART No.	AN-2858 & AN-2858-B	REVISION DATE	11-15-11

MATERIAL: ALUMINUM ALLOY #ADC-12

FINISH: NATURAL (NO SUFFIX)
SMOOTH BLACK (SUFFIX -B)

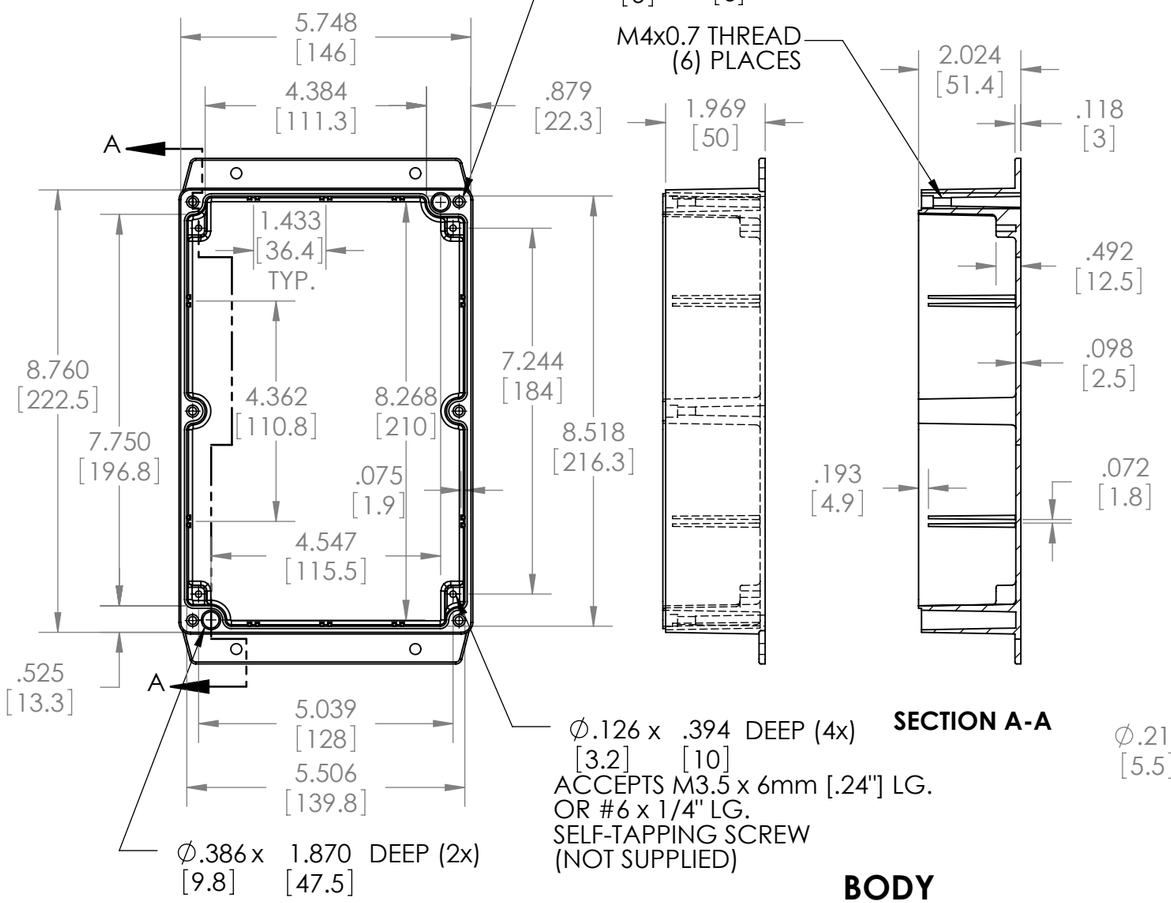

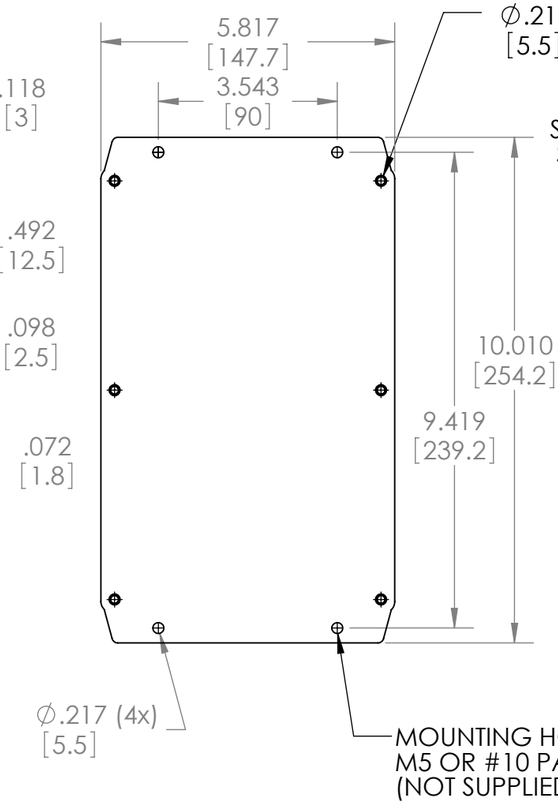

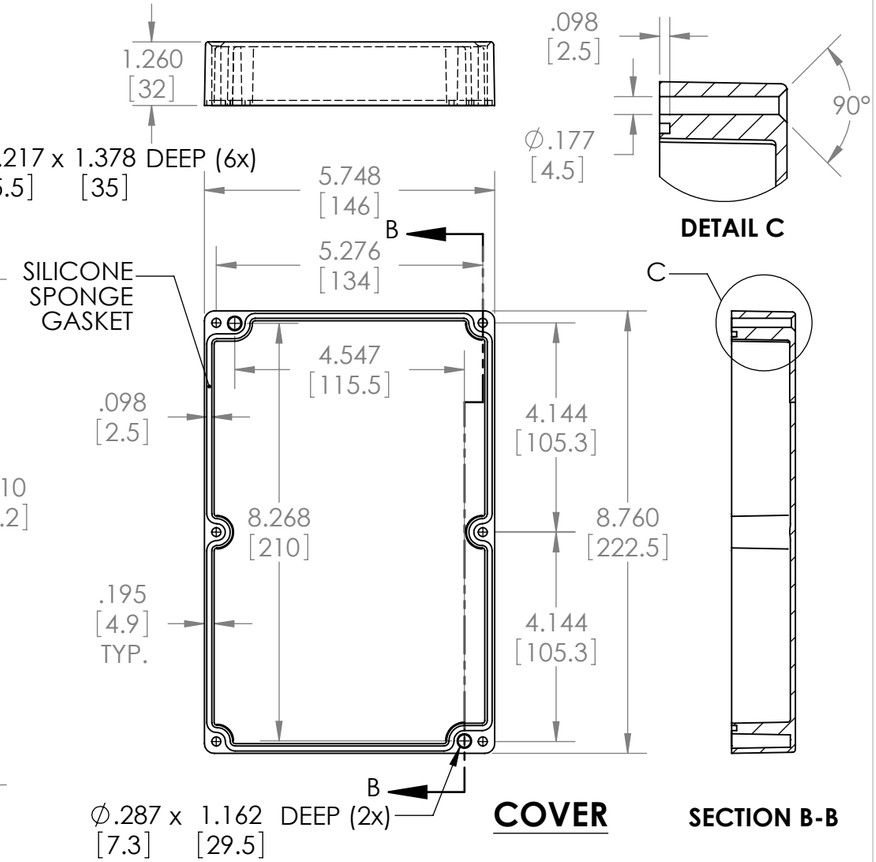

BODY

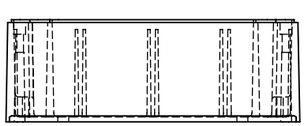

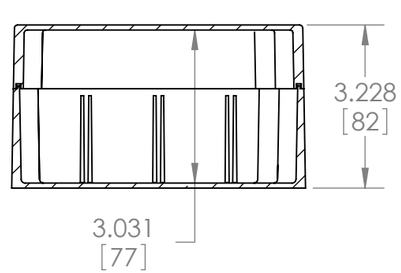

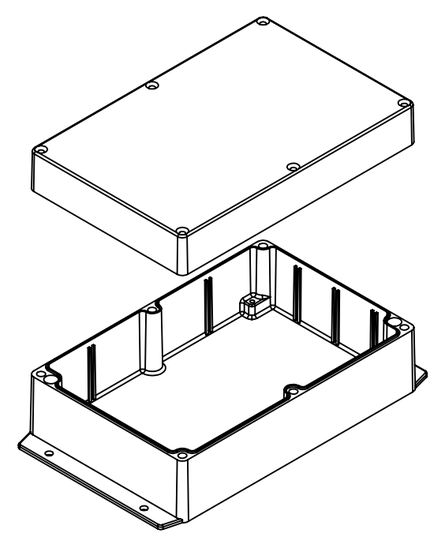

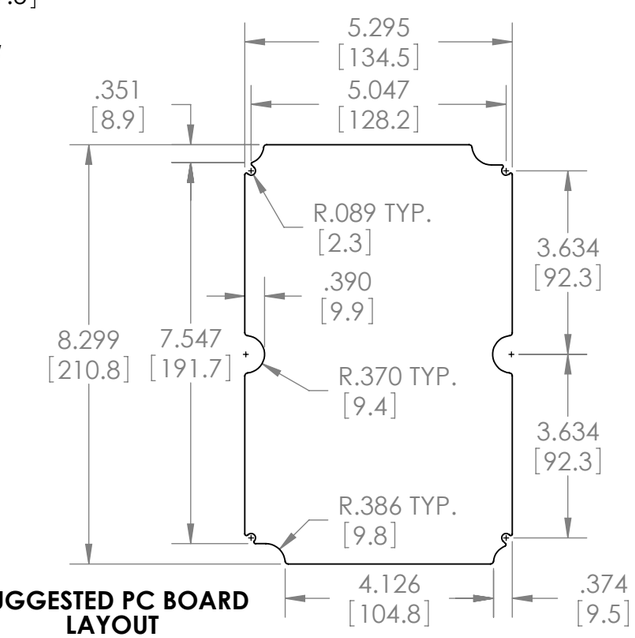

SUGGESTED PC BOARD LAYOUT

NOTES:
1.) SIX (6) M4x0.7 x 45mm (1.77") LG. CSK. HEAD STAINLESS STEEL SCREWS SUPPLIED FOR ASSEMBLY OF COVER TO BODY.
2.) ALL HOLE DIAMETERS HAVE ±.005[±.13] TOLERANCE
ALL OTHER DIMENSIONS HAVE ±.015[±.38] TOLERANCE
3.) ALL OUTSIDE AND INSIDE DRAFT ANGLE: 1°