THIS DRAWING IS UNPUBLISHED. RELEASED FOR PUBLICATION 2015
© COPYRIGHT 2015 Tyco Electronics AMP GmbH ALL RIGHTS RESERVED.

REVISIONS					
P	LTR	DESCRIPTION	DATE	DWN	APVD
	B6	ECR-14-015440	16OCT2014	MN	Sche
	B7	NEW VARIANTS ADDED. NEW 3D DRW CREATED	09JUN2015	Mah	Schim
	B8	DEACTIVATED PNs 1355950-4 AND 968075-4	17MAY2016	SCK	Schim

Normale Anwendung
STANDARD APPLICATION

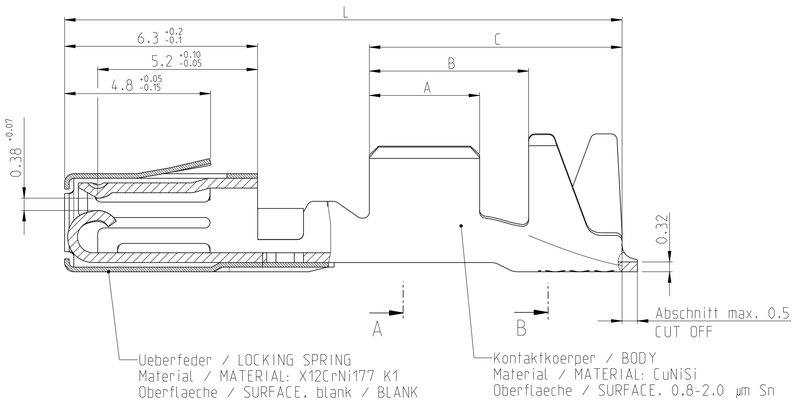

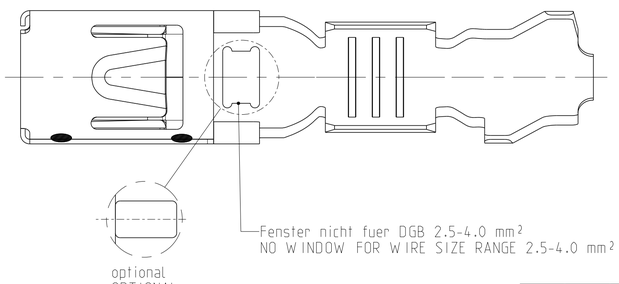

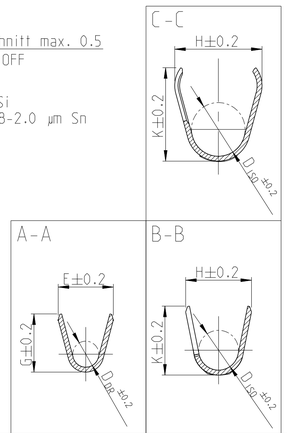

Ansicht ohne Crimp
VIEW WITHOUT CRIMP

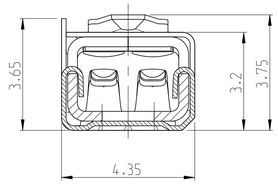

Einzeldichtungssystem
SINGLE WIRE SEAL SYSTEM

(MISSING DIMENSIONS SEE STANDARD APPLICATION)
(Fehlende Masse siehe normale Anwendung)

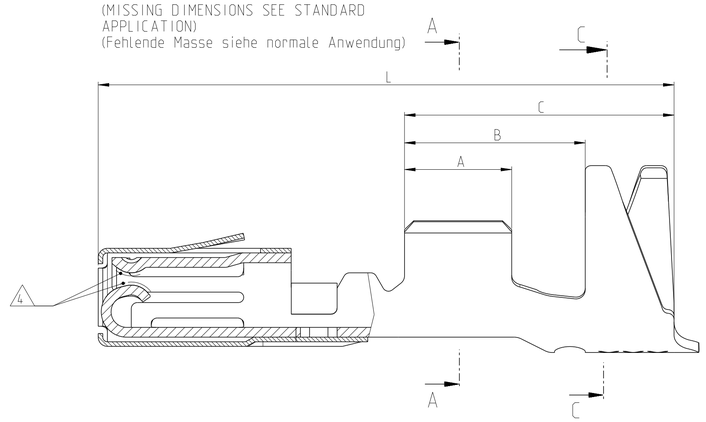

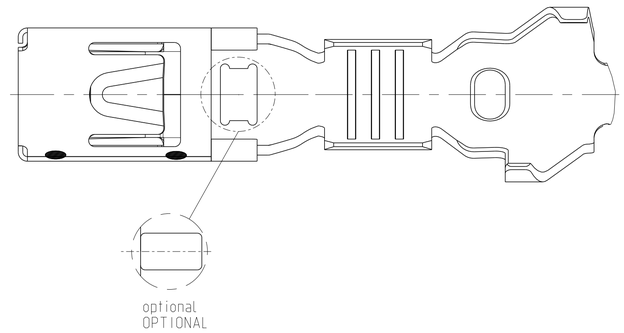

	TE-Bestell-Nr. Bandware TE ORDER NO STRIP FORM	REV.	NOTE	Sn Oberflaeche SURFACE	VERSION	Drahtgroessenbereich WIRE SIZE RANGE [mm²]	A	B	C	E	G	D_{Dr}	H	K	D_{ISO}	L	Gramm GRAM / Gewicht WEIGHT	Verarbeitung APPLICATION	zugehoerige Einzeldichtung SUITABLE SINGLE WIRE SEAL: Bestell-Nr. ORDER NO. TAB NR: 116-18005-600	Farbe COLOUR
	-	-	-	-	Einzeldichtungssystem SINGLE WIRE SEAL SYSTEM	> 1.0-2.5	3.5	5.9	8.8	3.6	3.8	1.7	5.7	6.1	3.5	18.8	-	siehe Verarbeitungsspezifikation SEE APPLICATION SPECIFICATION 114-18141-1	967609-1	gelb/YELLOW
SUPERSEDED BY 968075-5	~~968120-5~~	D	4	-													0.5			
	968120-2	D	-	X													0.5			
	968119-4	D	6	-		> 0.5-1.0	3.0	5.4	8.3	2.5	2.7	1.2	5.5	5.9	3.3		0.5		967610-1	grau/GREY
SUPERSEDED BY 968075-5	~~968119-5~~	D	4	-													-			
SUPERSEDED BY 968119-4	~~968119-3~~	D	5	-													0.5			
	968119-2	D	-	X													0.5			
	-	-	-	-		0.35-0.5	2.5	4.9	7.8	2.1	2.1	0.8	5.4	5.7	3.2		-			
SUPERSEDED BY 968075-5	~~968680-5~~	B	4	-													0.5			
	968680-2	B	-	X													0.5			
	-	-	-	-	normale Anwendung STANDARD APPLICATION	> 2.5-4.0	4.0	5.9	9.3	4.5	4.7	2.3	5.4	5.6	3.2	19.5	-			
SUPERSEDED BY 968075-5	~~1355950-5~~	-	4	-													0.5			
B8	~~1355950-4~~	A	6	-													0.5			
	1355950-2	B	-	X													0.5			
	-	-	-	-		> 1.0-2.5	3.5	5.2	8.25	3.6	3.8	1.7	4.3	4.5	2.6		0.5			
	-	-	-	-													-			
7	968075-5	D	4	-													0.5			
B8	~~968075-4~~	A	6	-													0.5			
	-	-	-	-													0.5			
	968075-2	D	-	X													0.5			
	-	-	-			> 0.5-1.0	3.0	4.6	7.0	2.5	2.7	1.2	3.2	3.4	1.8	18.2	-			
SUPERSEDED BY 968075-5	~~968074-5~~	D	4	-													0.5			
	968074-2	D	-	X													0.5			
	-	-	-	-		0.35-0.5	2.5	3.7	5.8	2.1	2.1	0.8	2.9	2.9	1.4		-			
SUPERSEDED BY 968075-5	~~968678-5~~	B	4	-													0.5			
	968678-2	B	-	X													0.5			

NOTES
Bemerkungen

1. SUITABLE FOR PIN CONTACT SEE DRAWING:
   Passend zu Stiftkontakt:
   TE: 1355933
2. FOR FLR-CONDUCTOR ACCORDING TO DIN 72551, PART 6 ONLY
   Nur fuer FLR-Leitungen nach DIN 72551, Teil 6
3. DETAILS OF DESIGN ARE LEFT TO MANUFACTURER
   Einzelheiten der Ausfuehrung bleiben dem Hersteller ueberlassen

4. MIN. 0.8 µm Au OVER MIN. 1.2 µm Ni
   Min. 0.8 µm Au ueber min. 1.2 µm Ni
5. 2-4 µm ELECTROPLATED SILVER
   2-4 µm galvanisch Silber
6. MIN. 0.8 µm PdNi OVER MIN. 1.2 µm Ni
   Min. 0.8 µm PdNi ueber min. 1.2 µm Ni
7. FOR INSPECTION PURPOSES ONLY
   Nur fuer Pruefzwecke

1:1 1:1

THIS DRAWING IS A CONTROLLED DOCUMENT.

DIMENSIONS: mm
TOLERANCES UNLESS OTHERWISE SPECIFIED: 0 PLC ± n. ISO 8015; 1 PLC ± n. ISO 2768-; 2 PLC ± mH -E; 3 PLC ± n. DIN 16901; 4 PLC ANGLES ±
MATERIAL - -
FINISH - -

DWN S.Garcia 22MAY2000
CHK R.Jetter 22MAY2000
APVD - -
PRODUCT SPEC 108-18476-1
APPLICATION SPEC 114-18141-1
WEIGHT -

TE Connectivity

NAME MICRO POWER QUADLOK BUCHSENKONTAKT
Tabellenzeichnung Buchsenkontakt
TABLE SOCKET CONTACT

SIZE A1 | CAGE CODE 00779 | DRAWING NO C-1355934 | RESTRICTED TO -

Customer Drawing | SCALE 5:1 | SHEET 1 OF 1 | REV. B8

4805 (3/13)